COOLING SYSTEM

Part No.	Description	Plate No.	No. per Unit	Remarks
135931	**RADIATOR BLOCK ASSEMBLY**	24—1	1	
UFB.131/6R	**Bolt,** securing Radiator Block		4	
FG.105/X	**Washer,** Spring, on Bolts		4	
FW.105/T	**Washer.** Plain, under Spring Washers		4	
422505/11	**DRAIN TAP, FOR RADIATOR BLOCK**	24—2	1	
424775	**Copper Washer,** on Drain Tap	24—3	1	
307980	**HEADER TANK ASSEMBLY**	24—4	1	
431362	**HOSE, FROM HEADER TANK TO WATER OUTLET PIPE**	24—5	1	
431363	**HOSE, FROM RADIATOR BLOCK TO HEADER TANK**	24—6	1	
423176/23	**Clip,** securing Hoses	24—7	4	
431361	**OVERFLOW PIPE ON HEADER TANK**	24—8	1	
428753	**Clip,** securing Overflow Pipe to Valance		1	
425286/17	**Screw,** securing Clip		1	
308272	**FILLER CAP ON HEADER TANK (1571515)**	24—9	1	
307983	**HOSE, FROM WATER PUMP TO BOTTOM OF RADIATOR BLOCK**	24—10	1	
423176/23	**Clip,** securing Hose to Water Pump and Radiator Block	24—11	2	

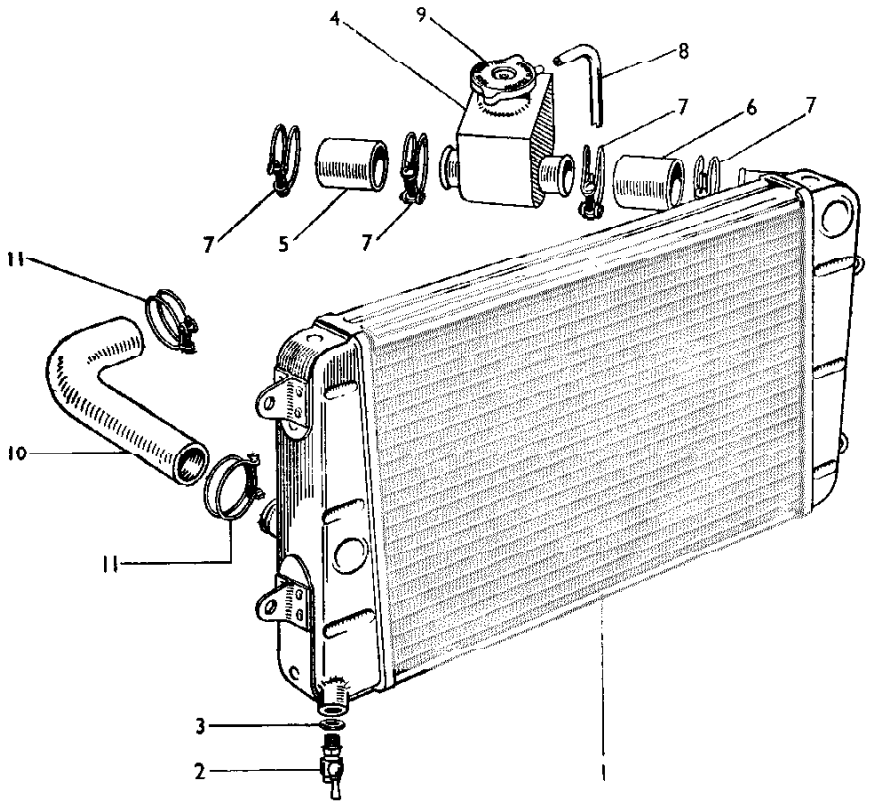

PLATE 24